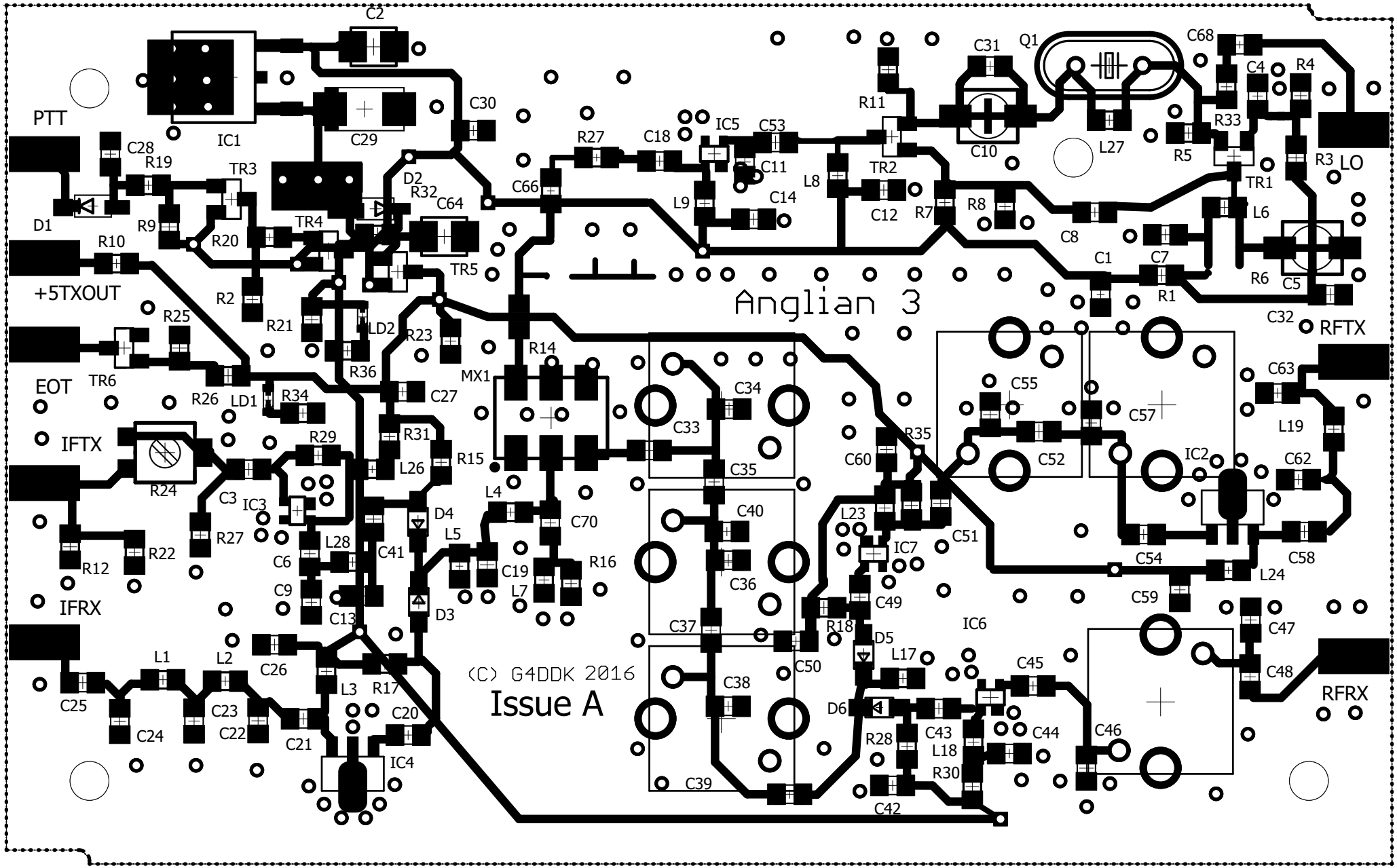

Anglian 3
(C) G4DDK 2016
Issue A
PTT
+5TXOUT
EOT
IFTX
IFRX
LO
RFTX
RFRX
IC1
IC2
IC3
IC4
IC5
IC6
IC7
Q1
TR1
TR2
TR3
TR4
TR5
TR6
MX1
D1
D2
D3
D4
D5
D6
LD1
LD2
C1
C2
C3
C4
C5
C6
C7
C8
C9
C10
C11
C12
C13
C14
C18
C19
C20
C21
C22
C23
C24
C25
C26
C27
C28
C29
C30
C31
C32
C33
C34
C35
C36
C37
C38
C39
C40
C41
C42
C43
C44
C45
C46
C47
C48
C49
C50
C51
C52
C53
C54
C55
C57
C58
C59
C60
C62
C63
C64
C66
C68
C70
R1
R2
R3
R4
R5
R6
R7
R8
R9
R10
R11
R12
R14
R15
R16
R17
R18
R19
R20
R21
R22
R23
R24
R25
R26
R27
R28
R29
R30
R31
R32
R33
R34
R35
R36
L1
L2
L3
L4
L5
L6
L7
L8
L9
L17
L18
L19
L23
L24
L26
L27
L28